Model #2107-10

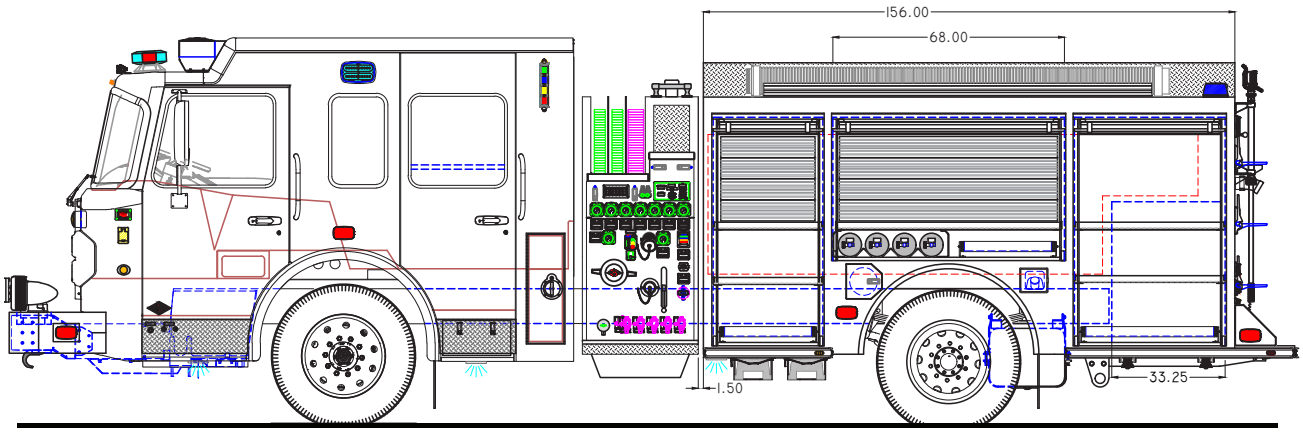

CUSTOM S-180 PUMPER

AVAILABLE FOR IMMEDIATE SALE

CHASSIS

- 2026 Spartan Metro Star LFD with 10" Raised Roof
- Seating Capacity of 6
- IMMI 4Front Occupant Protection
- RollTek Rollover Protection
- 21" Front Bumper Extension with Center Compartment
- Cummins ISL9 450 HP Engine
- Allison 3000 EVS Transmission
- 20,000# Front Axle Weight Rating
- 27,000# Rear Axle Weight Rating

PUMP & PLUMBING

- Hale DSD 1500 GPM Pump
- 750 Gallon Water Tank
- 20 Gallon Foam Tank
- FoamPro 1600 Foam System
- (1) 2.5" LS Auxiliary Inlet
- (1) 2.5" RS Auxiliary Inlet
- (1) 2.5" LS Discharge
- (1) 2.5" RS Discharge
- (1) 3" RS Discharge
- (1) 3" Deck Gun Discharge
- (2) 1.75" Crosslays & (1) 2.5" Crosslay
- Front Bumper Discharge
- (1) 2" Tank Fill

BODY

- High Strength Aluminum Body
- Vibra-Torque Body Mounting System
- ROM Roll-up Doors
- (3) SCBA Bottle Storage Compartments
- RS Overwheel Roll-Out Drawer
- Whelen LED Lighting Package
- Ladder Storage for: (1) 24' Two-Section Ladder; (1) 14' Roof Ladder; (1) 10' Attic Ladder
- Storage for (3) Pike Poles with Standard Hook
- 17" Deep Rear Tailboard
- Overall Height: 116"
- Overall Length: 380"
- Wheelbase: 177.5"

Colden FIRE & RESCUE

CONTACT US FOR MORE INFORMATION

info@coldenfire.com

coldenfire.com

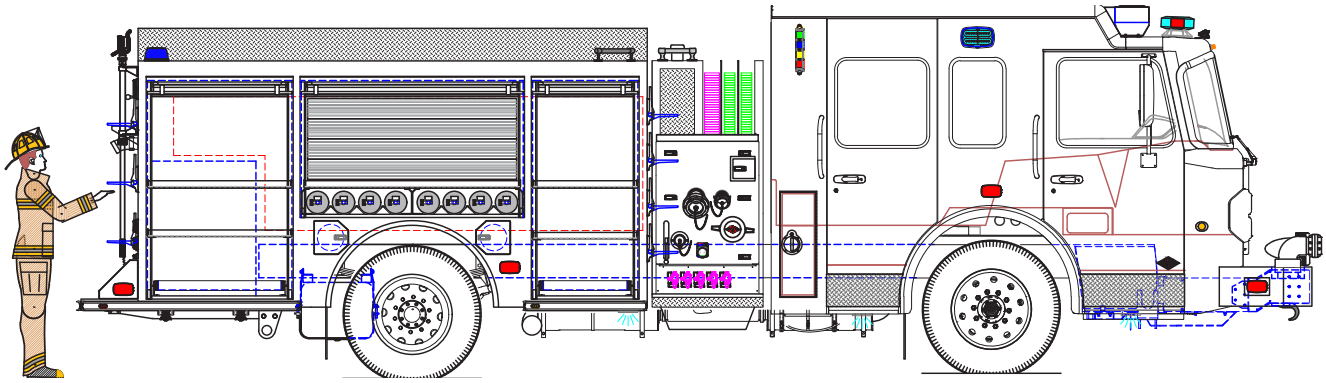

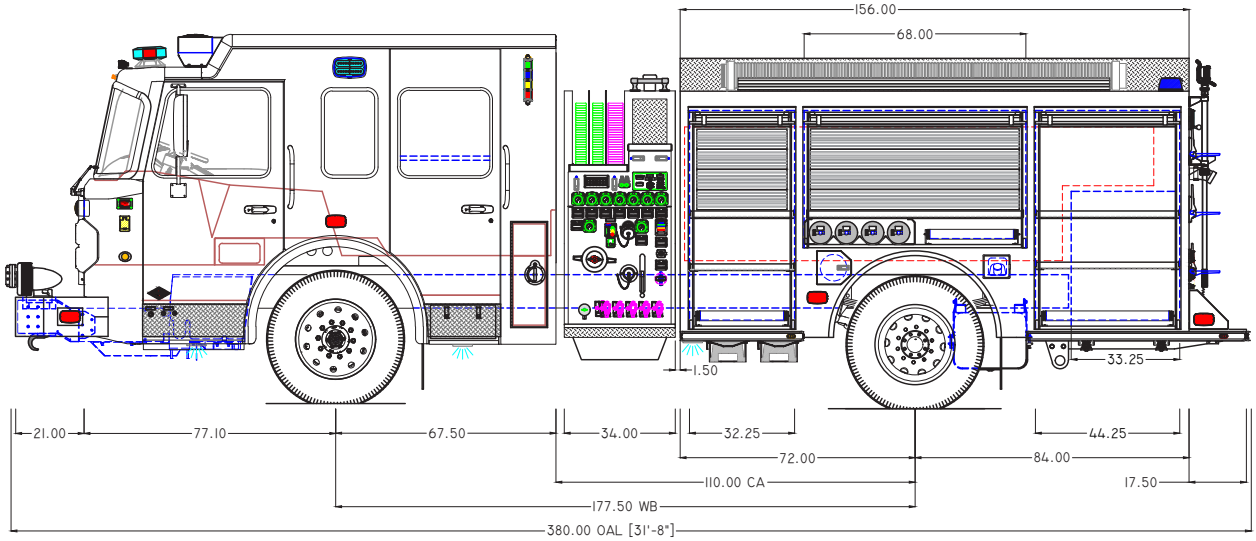

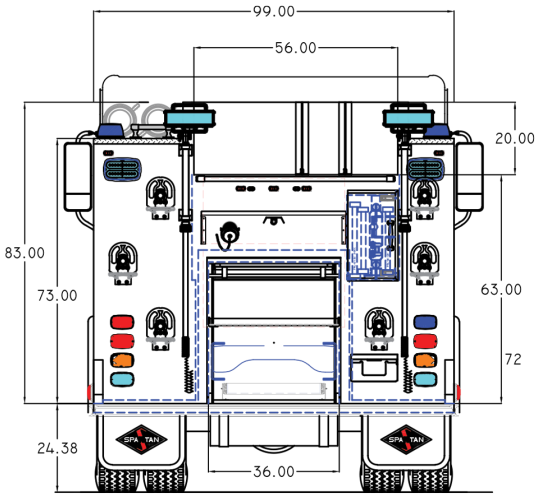

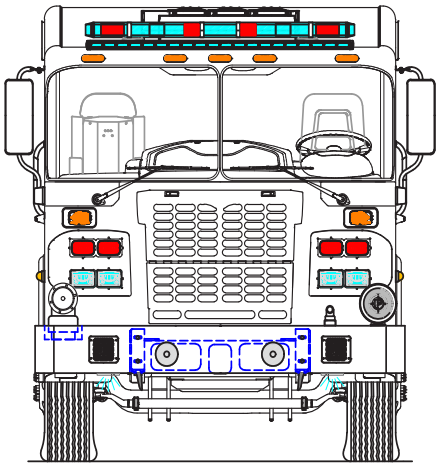

CONTACT US FOR MORE INFORMATION

info@coldenfire.com

Colden FIRE & RESCUE