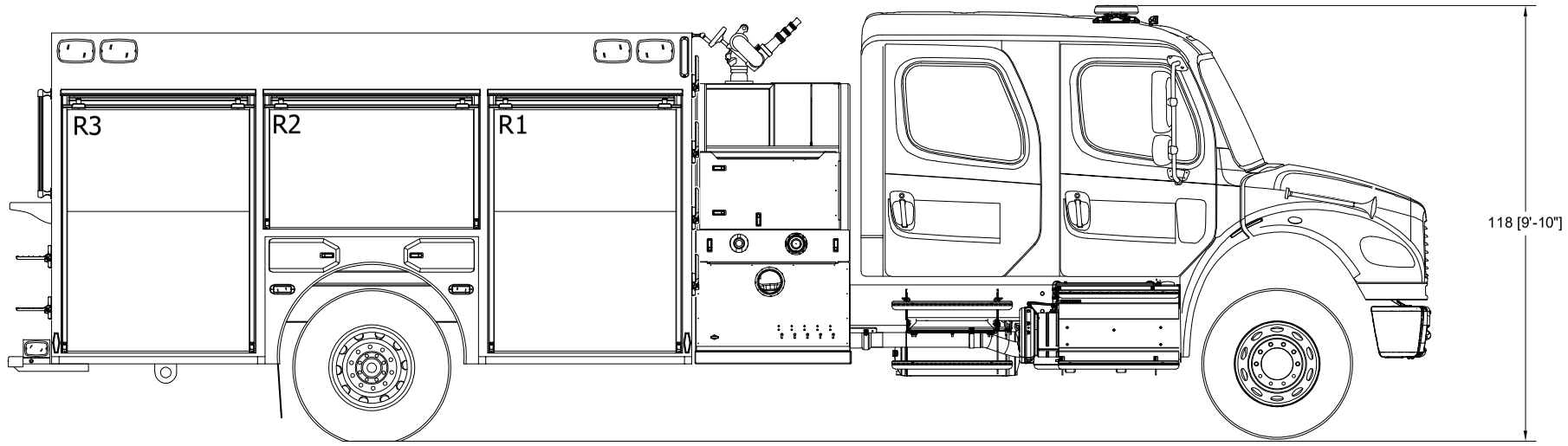

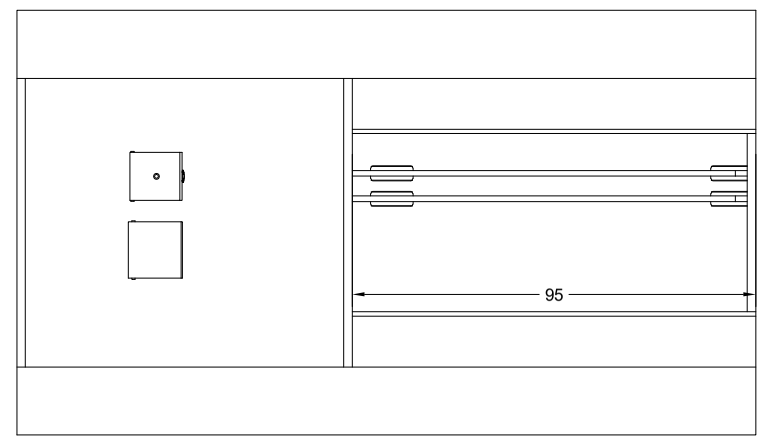

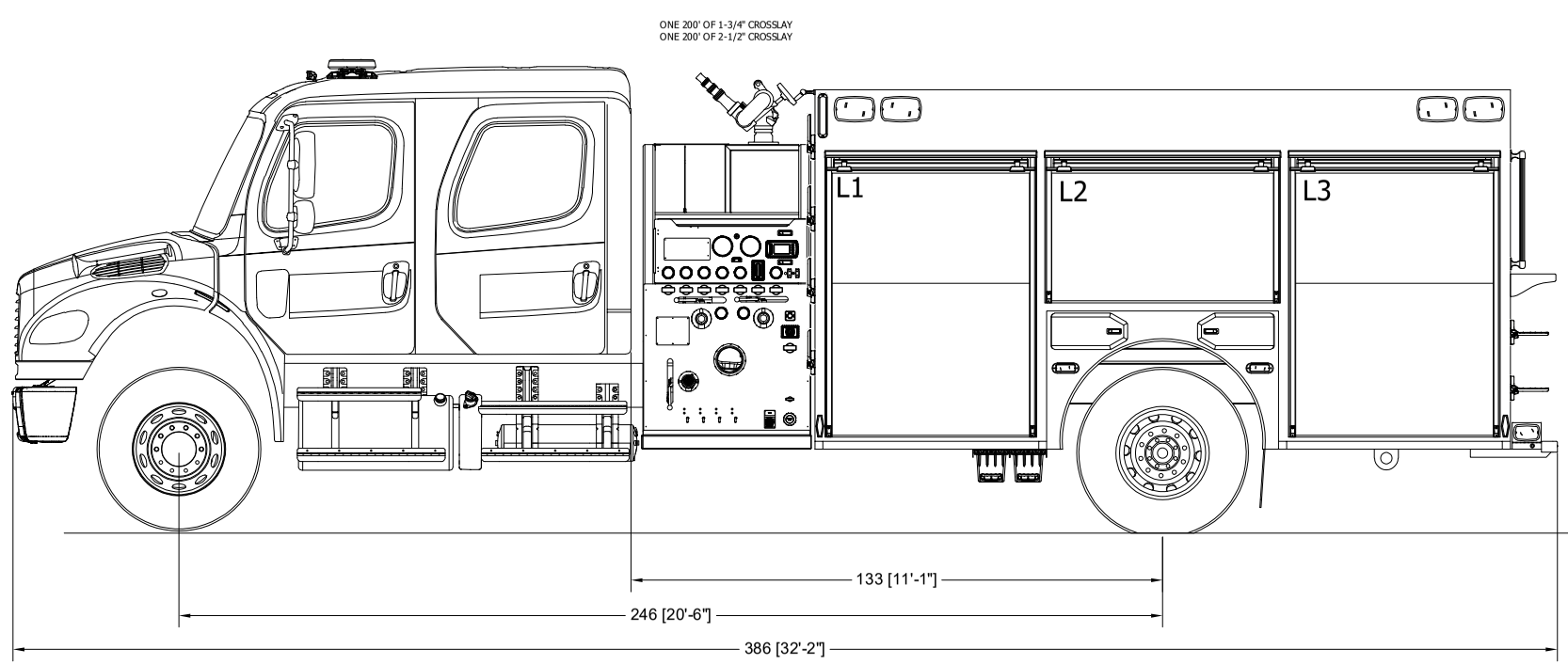

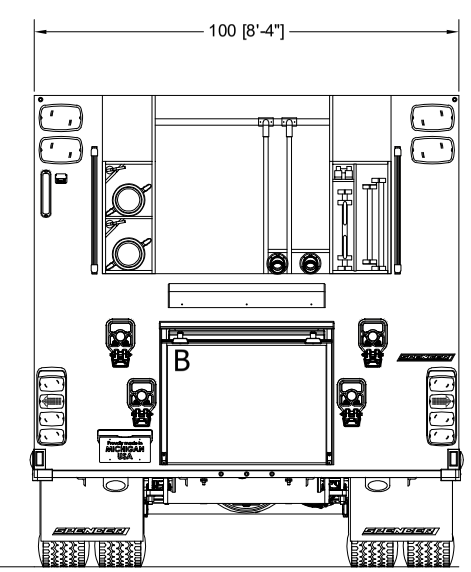

COLDEN SPENCER FREIGHTLINER 4 DOOR PUMPER LOW HOSEBED

CHASSIS:

MAKE AND MODEL: FREIGHTLINER M2 206 CREW CAB
WHEELBASE: 246"
CA: 133"
OVERHANG: 58"
FRONT AXLE RATING: 14,600#
REAR AXLE RATING: 27,000#

PUMP:

MAKE AND MODEL: HALE QMAX
GEAR BOX: SPLIT SHAFT
GPM RATING: 1500 GPM

TANK:

WATER CAPACITY: 1000 GALLONS
FOAM CAPACITY: 20 GALLONS FOAM SYSTEM READY
MATERIAL: POLY

BODY:

BODY MATERIAL: ALUMINUM
DOORS: ROM ROLLUP
LADDER: 1 - 24' 2 SECTION ALUMINUM
LADDER: 1 - 14' ROOF ALUMINUM
LADDER: 1 - 10' ATTIC ALUMINUM
PIKE POLE: 1 - 8' FIBERGLASS 1 - 6' FIBERGLASS
SUCTION HOSE: 2 - 10' HARD 6"

COMPARTMENTS:

	OVERALL WIDTH	OVERALL HEIGHT	OVERALL DEPTH	DOOR OPENING WIDTH	DOOR OPENING HEIGHT
L1	52	70	16/26	49	66
L2	58	36	16	55	32
L3	52	70	16/26	49	66
B	40	32	26	37	28
R1	52	70	16/26	49	66
R2	58	36	16	55	32
R3	52	70	16/26	49	66

MADE IN U S A

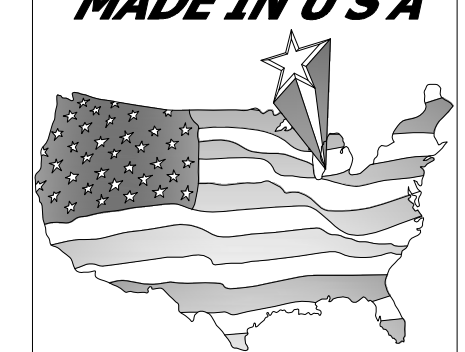

DATE:	INT:	REVISION	REV:
09-12-2024	BBB	BUILD DRAWING	-

NOTE: DIMENSIONS SHOWN ARE APPROXIMATE AND MAY CHANGE AS NECESSARY DURING CONSTRUCTION.
MINOR DETAILS MAY NOT BE SHOWN. THIS DRAWING IS FOR REFERENCE PURPOSES ONLY.
SOME ITEMS MAY OR MAY NOT BE SHOWN ON THE DRAWING AND ITEMS SHOWN MAY OR MAY NOT BE INCLUDED IN THE SPECIFICATIONS.
THE FINAL SPECIFICATIONS SHALL SUPERCEDE ALL OTHER DOCUMENTATION.
ALSO ANY UNSPECIFIED EQUIPMENT SUCH AS DECK GUNS WILL NOT BE INCLUDED IN THE OVERALL HEIGHT AND MAY INCREASE THE OVERALL DIMENSIONS OF THE VEHICLE.

#1766 BUILD DRAWING

APPROVAL SIGNATURES	
DATE	FIRE CHIEF
DATE	SALES
DATE	PRODUCTION

SPENCER

www.spencerfiretrucks.com

VISIT US ON

CUSTOM BUILT FIRE APPARATUS
PROUDLY MADE IN THE U.S.A.
LEADING THE INDUSTRY
IN QUALITY, INNOVATION, DESIGN AND PRIDE OF WORKMANSHIP

165 VETERANS BLVD. - SOUTH HAVEN, MI 49090
269.637.8721 Fax 269.639.1697